BALL SCREW JACKS

1 TON - 3/4" SCREW HEAVY DUTY

WB 51 / WB 201

Upright

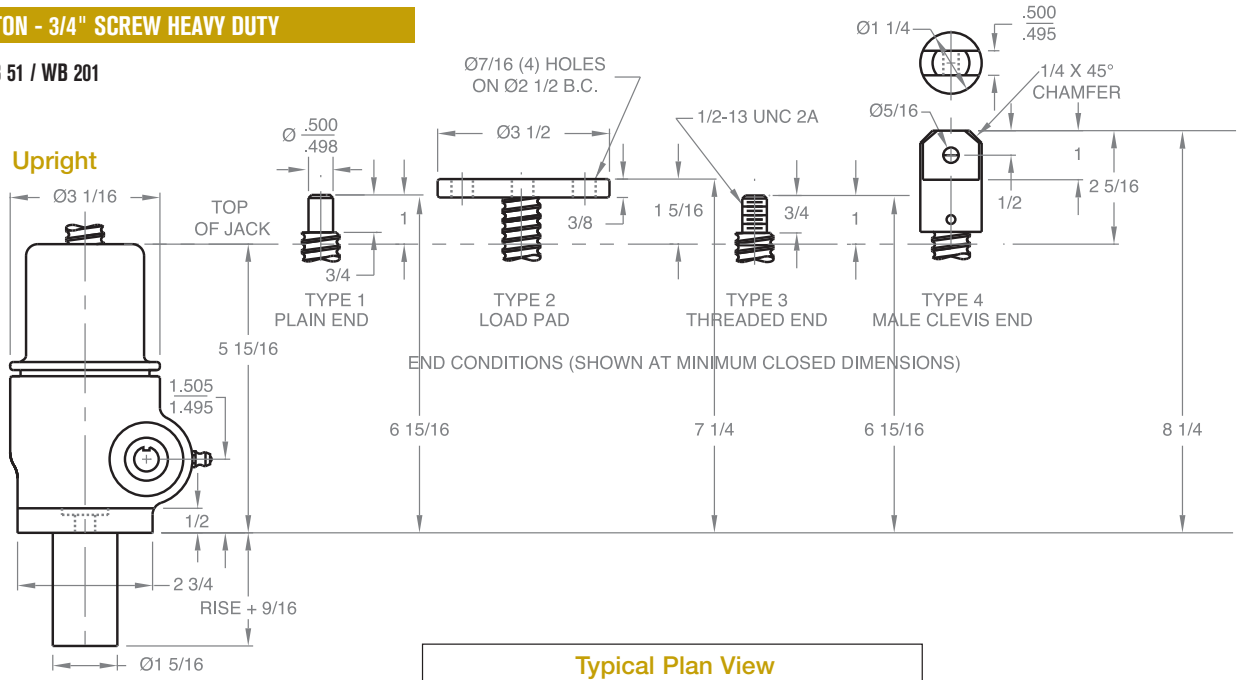

Upright traveling nut

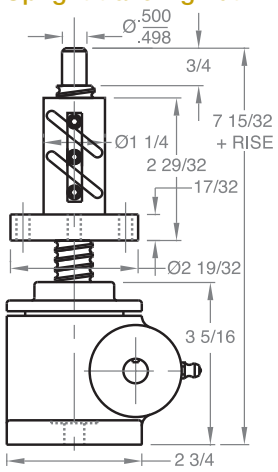

Typical Plan View

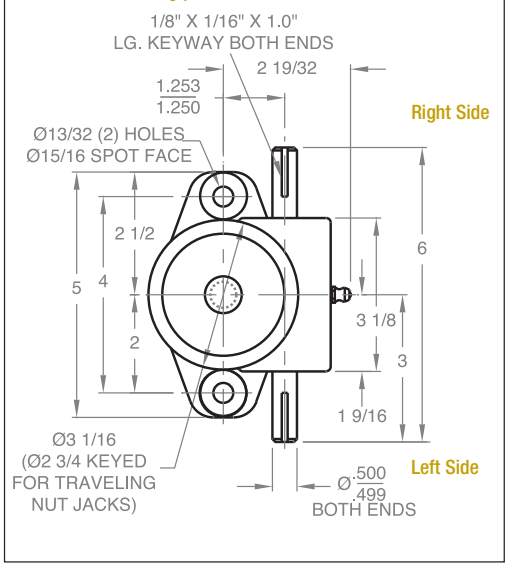

Inverted traveling nut

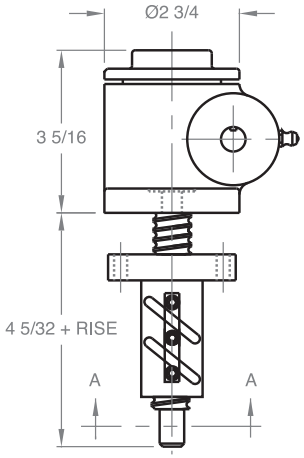

Inverted

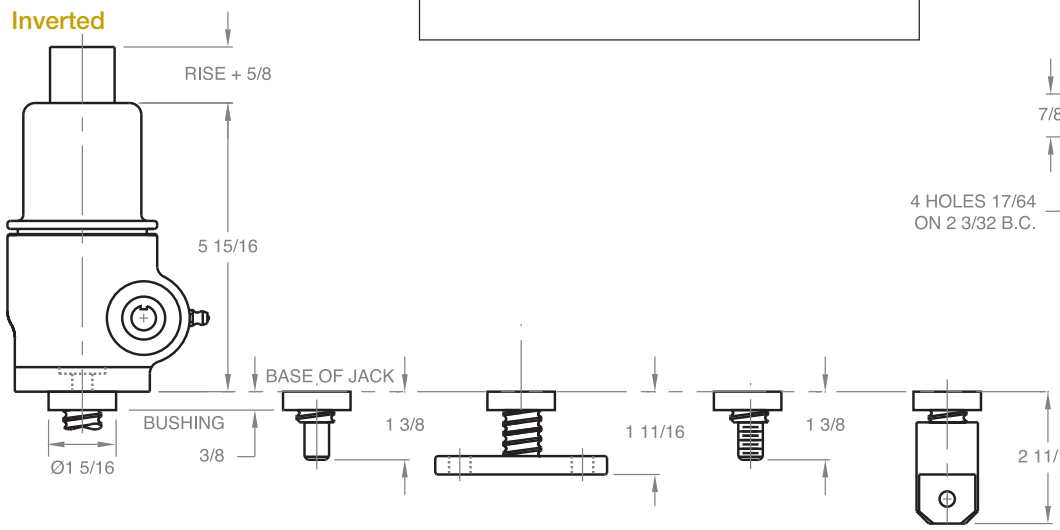

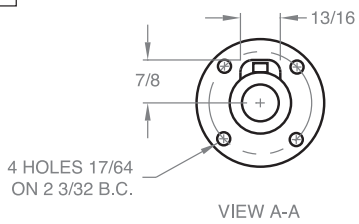

Note: Drawings are artist's conception — not for certification; dimensions are subject to change without notice.