MACHINE SCREW ComDRIVEs®

2 TON - 1" SCREW

CD 62 / DCD 62
CD 122 / DCD 122
CD 242 / DCD 242

Upright

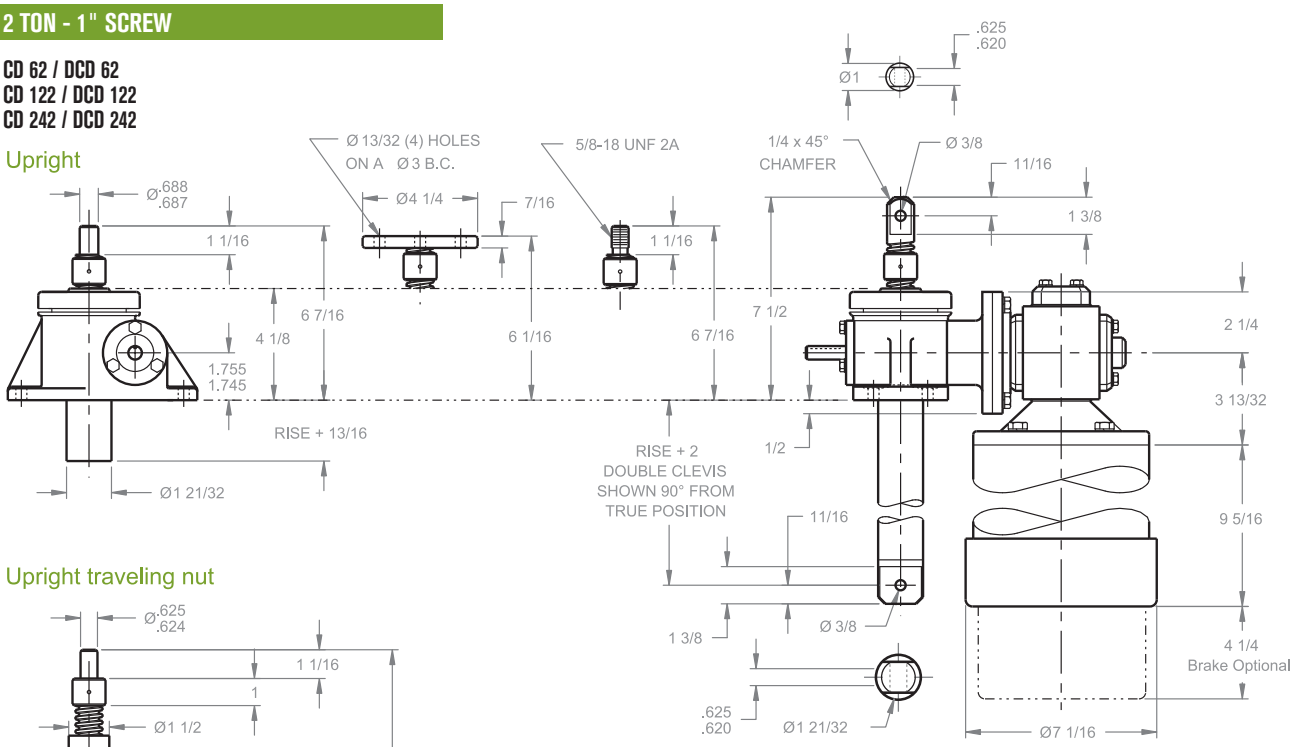

Upright traveling nut

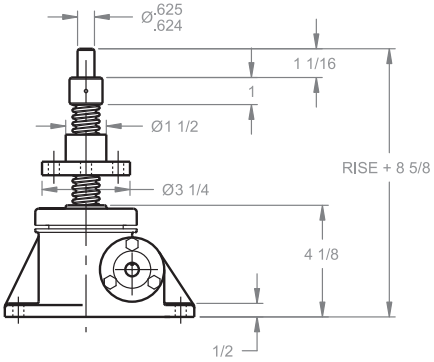

Inverted traveling nut

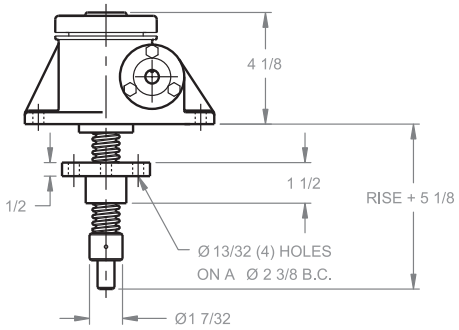

Typical Plan View

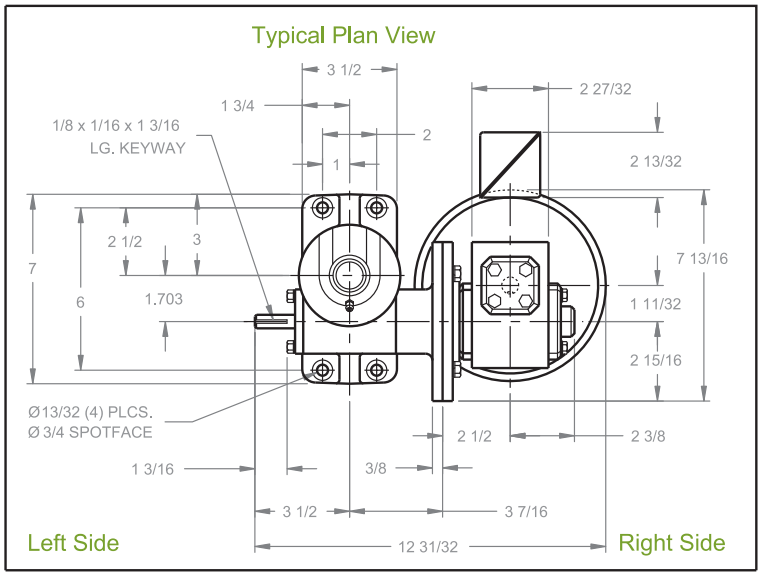

Inverted

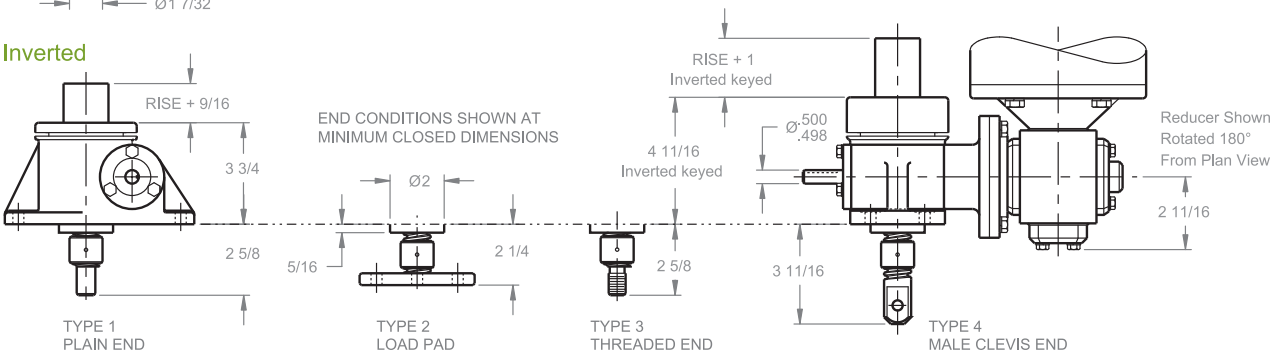

NOTE: FOR LIFTING CAPACITIES SEE PAGE 49

Note: Drawings are artist's conception — not for certification; dimensions are subject to change without notice.