MACHINE SCREW ComDRIVEs®

5 TON - 1 1/2" SCREW

CD 65 / DCD 65
CD 125 / DCD 125
CD 245 / DCD 245

Upright

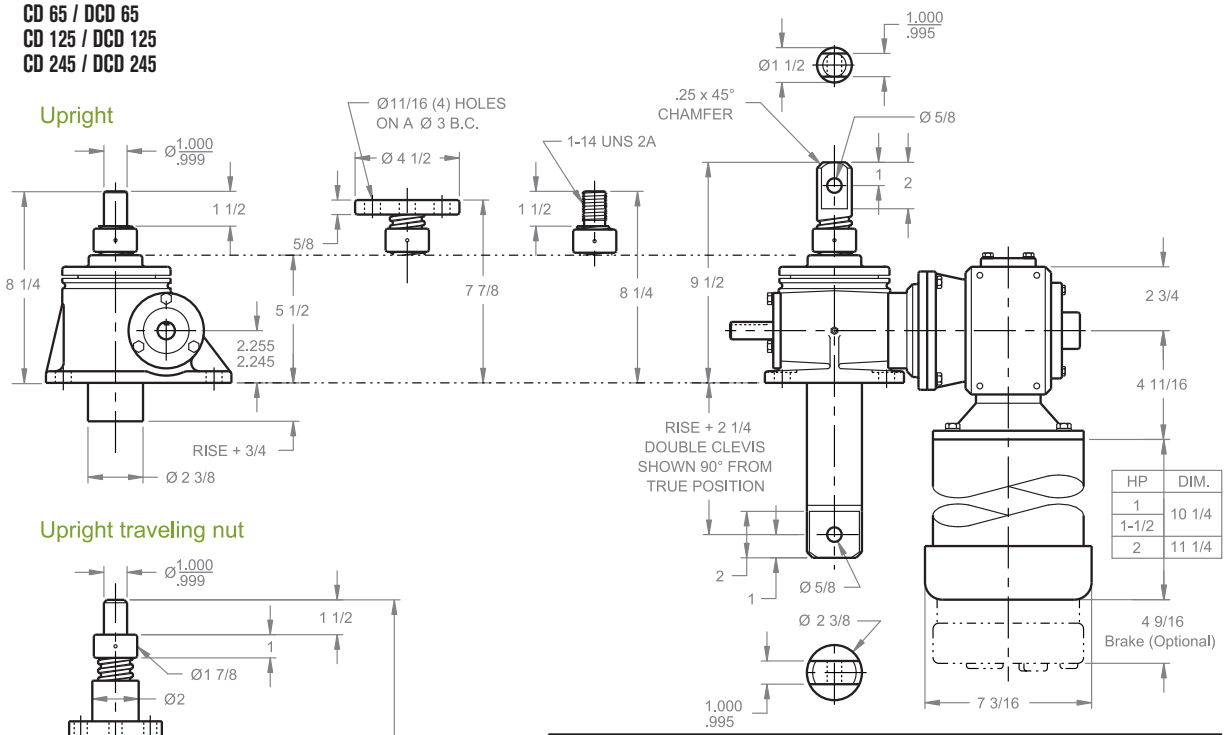

HP	DIM.
1	10 1/4
1-1/2	
2	11 1/4

Upright traveling nut

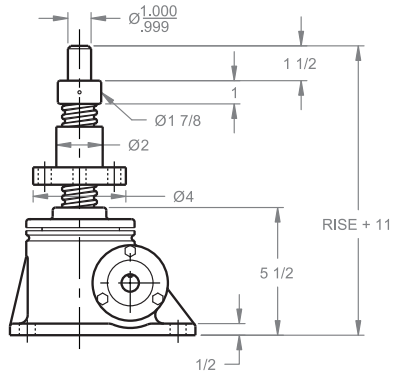

Inverted traveling nut

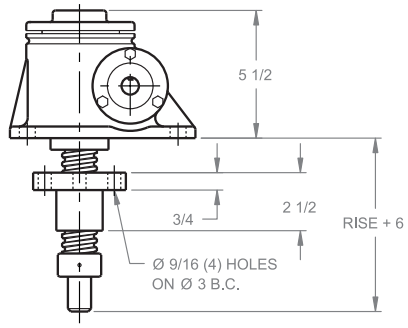

Typical Plan View

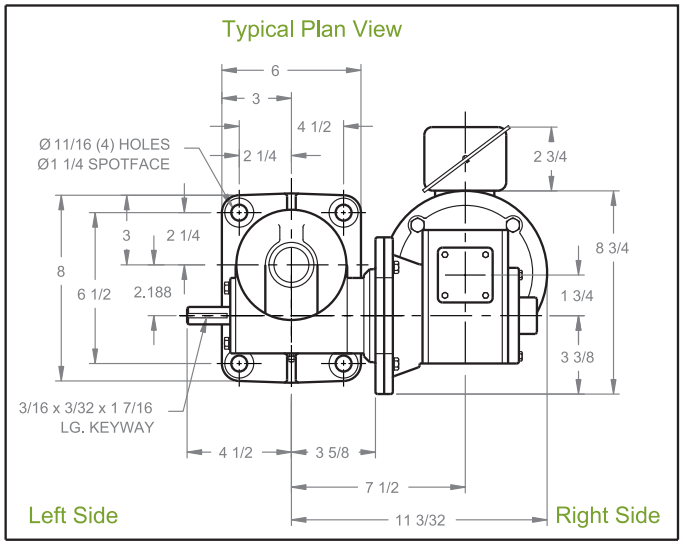

Inverted

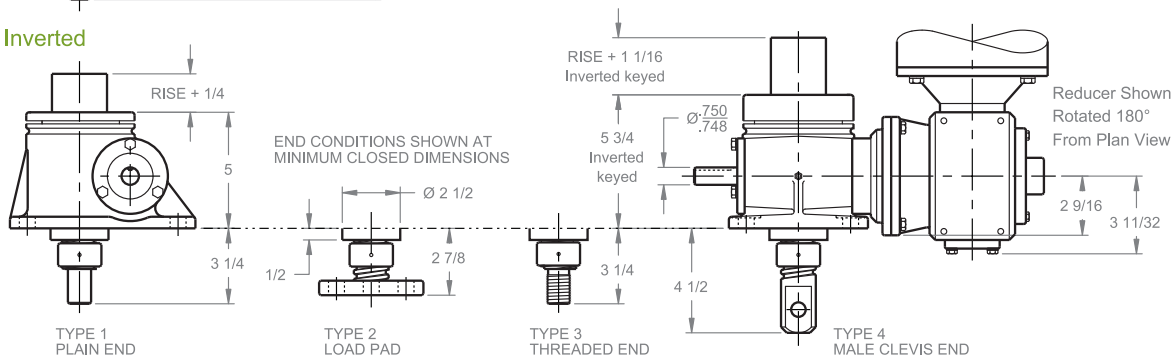

NOTE: FOR LIFTING CAPACITIES SEE PAGE 49

Note: Drawings are artist's conception — not for certification; dimensions are subject to change without notice.