MACHINE SCREW JACKS

10 TON - 2" SCREW

WJ 810 / DWJ 810
WJ 2410 / DWJ 2410
WJ 2510

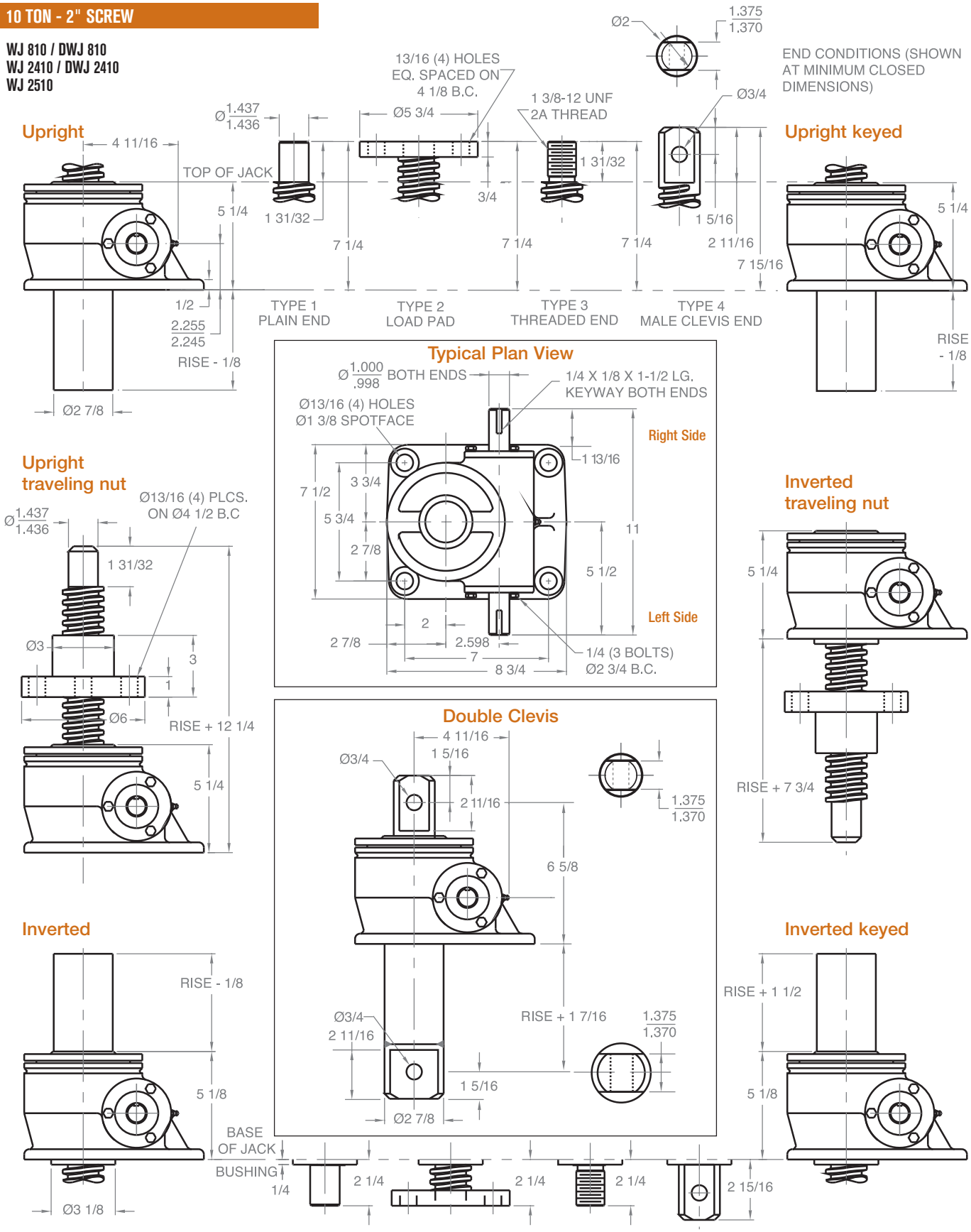

Note: Drawings are artist's conception — not for certification; dimensions are subject to change without notice.