MACHINE SCREW JACKS

1 TON - 3/4" SCREW

WJ 51 / WJ 201

Upright

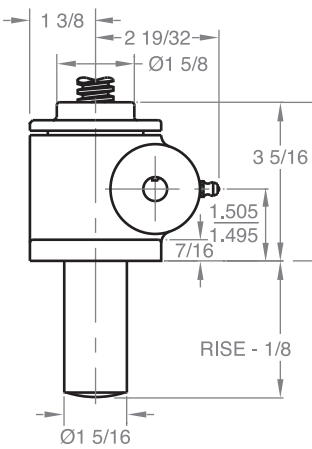

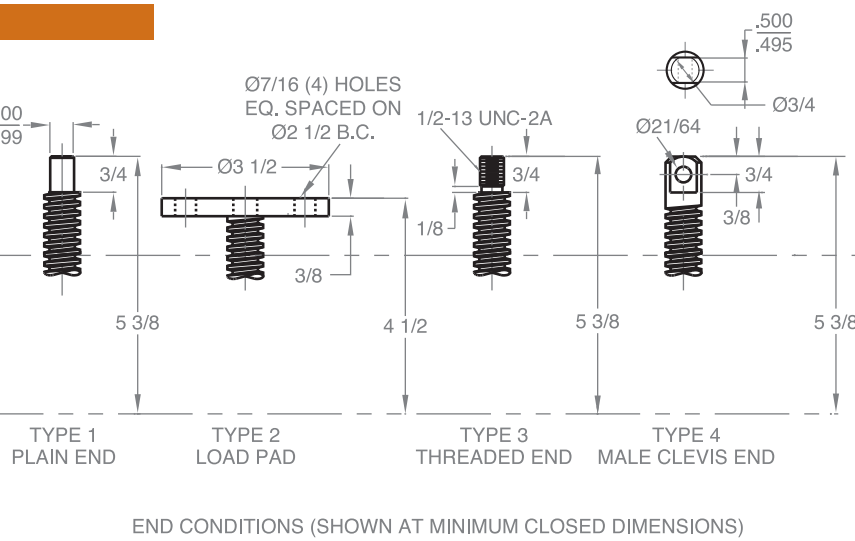

Upright keyed

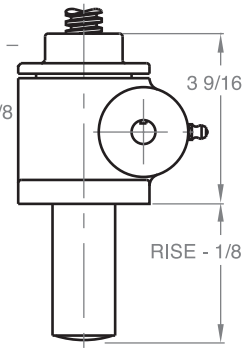

Upright traveling nut

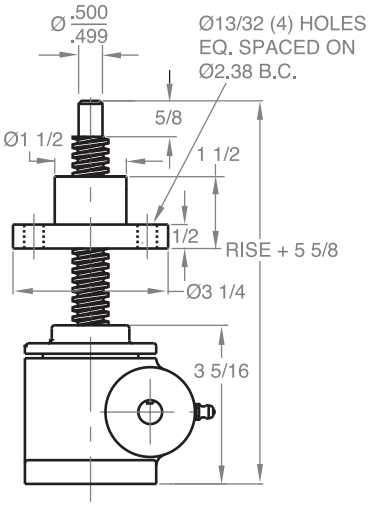

Typical Plan View

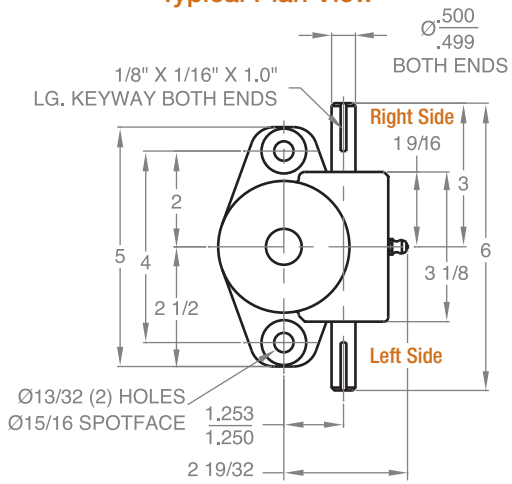

Inverted traveling nut

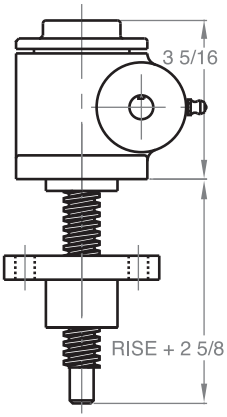

Inverted

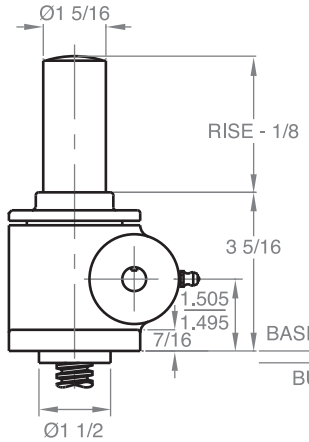

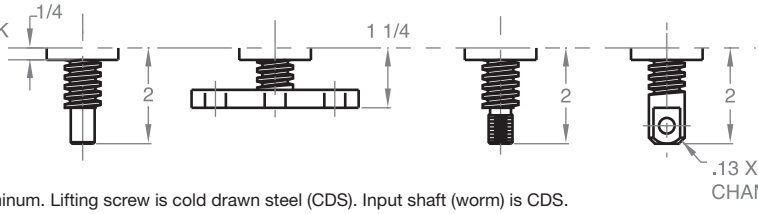

Inverted keyed

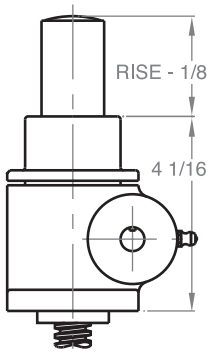

Material Notes: Housing and protection tube are aluminum. Lifting screw is cold drawn steel (CDS). Input shaft (worm) is CDS.

Note: Drawings are artist's conception — not for certification; dimensions are subject to change without notice.