# STAINLESS STEEL JACKS

## 5 TON - 1 1/2" SCREW

**SWJ 65 / DSWJ 65**
**SWJ 125 / DSWJ 125**
**SWJ 245 / DSWJ 245**

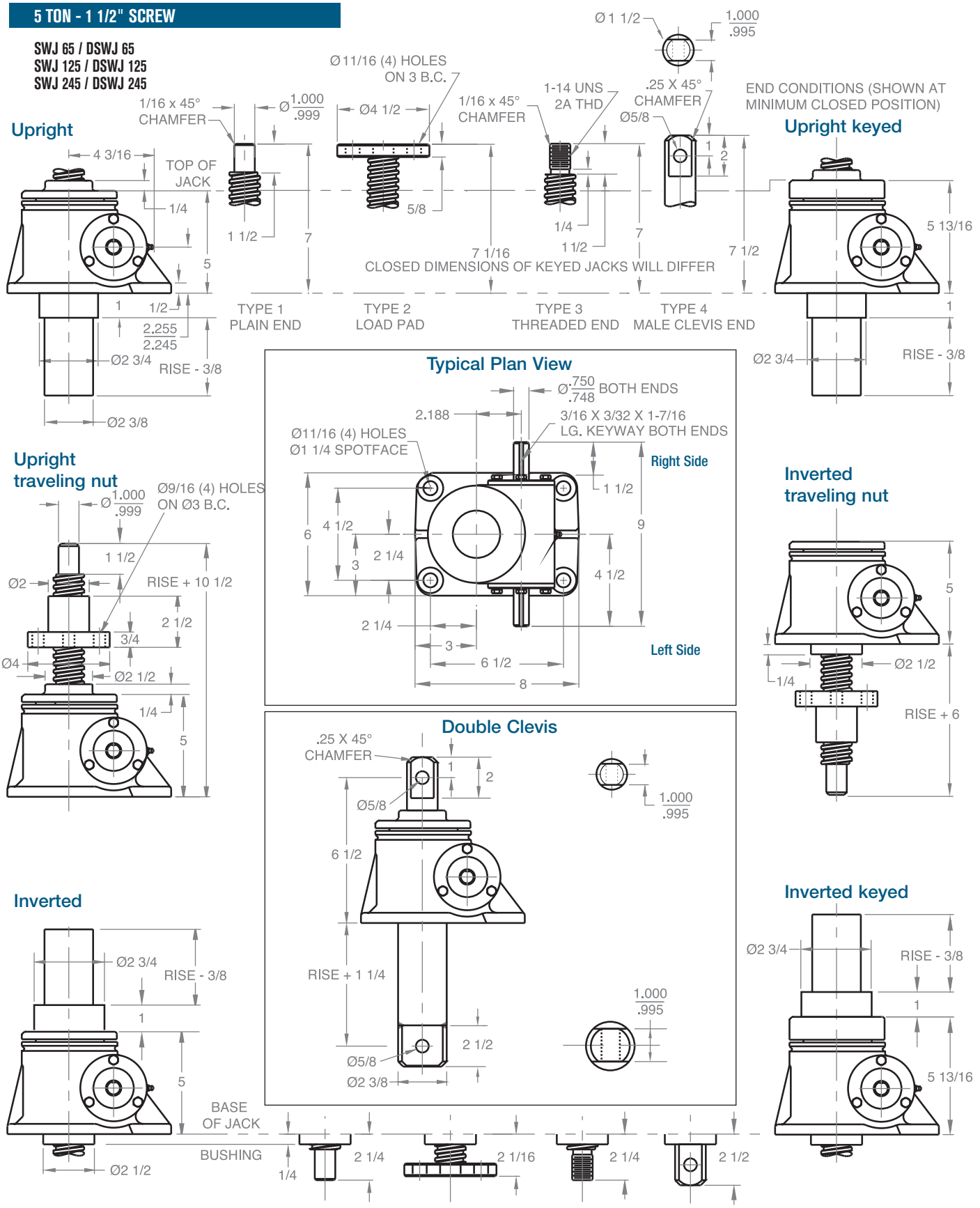


Note: Drawings are artist's conception — not for certification; dimensions are subject to change without notice.