Joyce 4.000" Dia. x 1.000 Lead Ball Screw with Standard Capacity Ball Nut

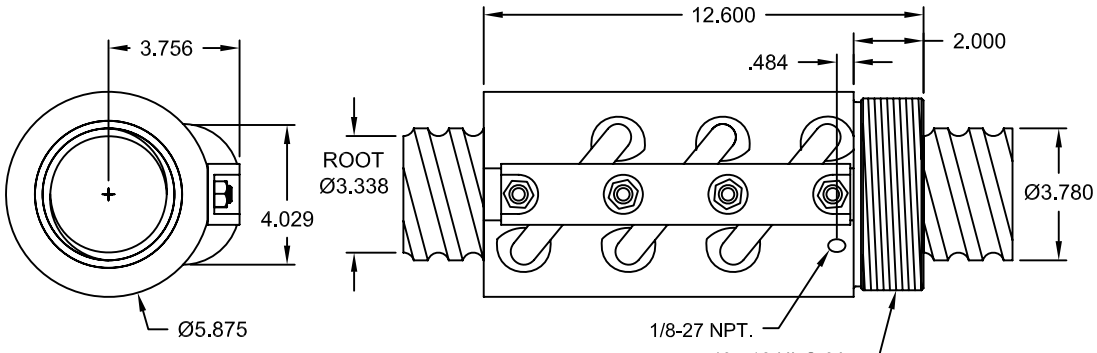

Ball Screw # BS400R100A
Ball Nut # BN400R100S

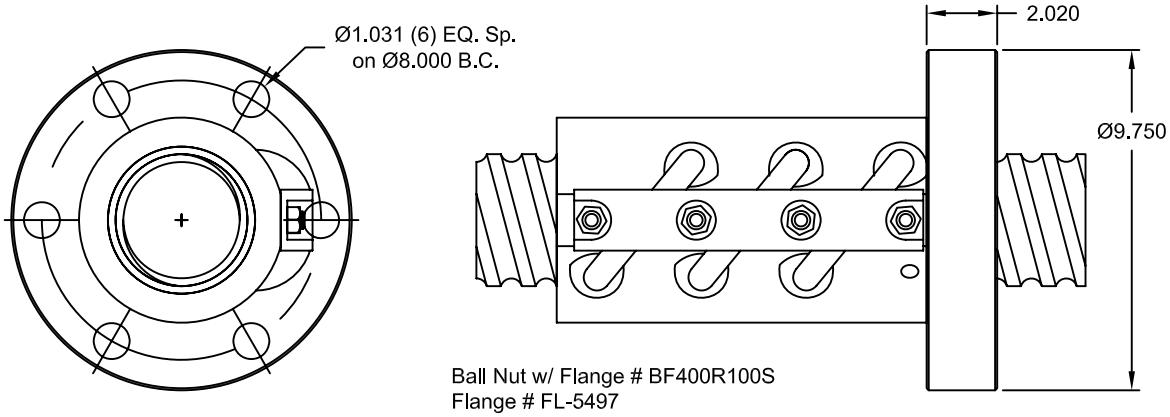

Ball Nut w/ Flange # BF400R100S
Flange # FL-5497

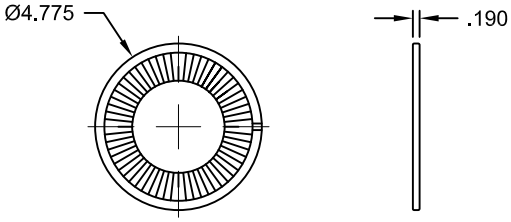

Wiper Kit # WK-90
Secured In Ball Nut With Snap Rings